SMD-401EF
Smoke Damper

Application

Model SMD-401EF is a class I leakage rated smoke damper with extruded aluminum blades and frame. High strength, streamlined extruded airfoil blades ensure the lowest resistance to airflow in HVAC systems. This model may be installed vertically (with blades running horizontal) or horizontally, and is rated for airflow and leakage in either direction.

Ratings

Leakage

UL 555S Leakage Class I

Velocity

Operational rated up to 3000 fpm (15.2 m/s). See chart below for size limitations.

Temperature

Maximum: 250°F (121°C) with all actuators

Pressure

Maximum: 6 in. wg (1.5 kPa)

Construction

Construction	Standard	Optional
Frame Material	Aluminum	-
Frame Thickness	.125 in. (3.2mm)	-
Frame Type	5 in. x 1 in. (127mm x 25mm) hat channel	Single Flange, Reverse Flange
Blade Material	Extruded Aluminum	-
Blade Action	Opposed	-
Blade Type	Airfoil	-
Linkage	Plated steel out of airstream, concealed in jamb	316SS
Axle Bearings	316SS	-
Axle Material	Plated steel	316SS
Blade Seals	Silicone	-
Jamb Seals	Stainless Steel	-

* W & H dimensions furnished approximately ¼ in. (6mm) undersize.
Note: This model is available with or without jackshaft.

See complete marking on product.

UL 555S Classification R13317

Model SMD-401EF meets the requirements for smoke dampers established by:

- National Fire Protection Association NFPA Standards, 90A, 92, 101, and 105
- International Building Codes (IBC)
- CSFM Californial State Fire Marshal Leakage (Smoke) Listing (#3230-0981:0501)

W x H	Minimum Size	Maximum Size	
		Single Section	Multiple Section
2000 fpm (10.2 m/s); 4 in. wg (1 kPa) pressure			
Inches	8 x 6	48 x 60	192 x 120
mm	203 x 152	1219 x 1524	4877 x 3048
3000 fpm (15.2 m/s); 6 in. wg (1.5 kPa) pressure			
Inches	8 x 6	36 x 48	144 x 96
mm	203 x 152	914 x 1219	3658 x 2438

Options and Accessories

- Clean wrap
- OCI: Open closed indication switches

Document Links

INSTALLATION

CATALOG

DAMPER SELECTION GUIDE

SPECIFICATIONS

WARRANTY

Pressure Drop

AMCA Figure 5.2

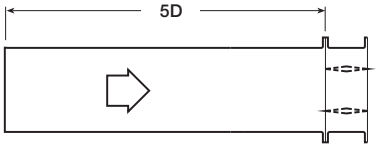

12 in. x 12 in. (305mm x 305mm)

Velocity (fpm)	Pressure Drop (in. wg)
500	0.01
1000	0.06
1500	0.13
2000	0.23
2500	0.35
3000	0.50
3500	0.68
4000	0.88

24 in. x 24 in. (610mm x 610mm)

Velocity (fpm)	Pressure Drop (in. wg)
500	0.01
1000	0.04
1500	0.10
2000	0.18
2500	0.28
3000	0.40
3500	0.54
4000	0.70

36 in. x 36 in. (914mm x 914mm)

Velocity (fpm)	Pressure Drop (in. wg)
500	0.01
1000	0.03
1500	0.06
2000	0.12
2500	0.18
3000	0.26
3500	0.35
4000	0.46

12 in. x 48 in. (305mm x 1219mm)

Velocity (fpm)	Pressure Drop (in. wg)
500	0.01
1000	0.06
1500	0.13
2000	0.23
2500	0.36
3000	0.51
3500	0.71
4000	0.93

48 in. x 12 in. (1219mm x 305mm)

Velocity (fpm)	Pressure Drop (in. wg)
500	0.01
1000	0.03
1500	0.06
2000	0.10
2500	0.16
3000	0.23
3500	0.30
4000	0.39

AMCA Figure 5.3

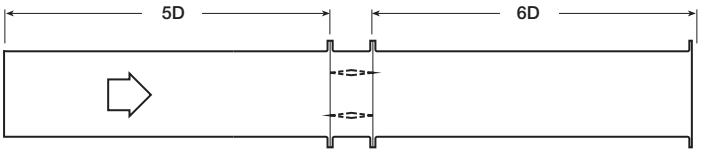

12 in. x 12 in. (305mm x 305mm)

Velocity (fpm)	Pressure Drop (in. wg)
500	0.01
1000	0.03
1500	0.07
2000	0.14
2500	0.21
3000	0.29
3500	0.39
4000	0.51

24 in. x 24 in. (610mm x 610mm)

Velocity (fpm)	Pressure Drop (in. wg)
500	0.01
1000	0.02
1500	0.04
2000	0.08
2500	0.13
3000	0.19
3500	0.26
4000	0.34

36 in. x 36 in. (914mm x 914mm)

Velocity (fpm)	Pressure Drop (in. wg)
500	0.01
1000	0.01
1500	0.02
2000	0.04
2500	0.06
3000	0.09
3500	0.13
4000	0.17

12 in. x 48 in. (305mm x 1219mm)

Velocity (fpm)	Pressure Drop (in. wg)
500	0.01
1000	0.03
1500	0.06
2000	0.11
2500	0.17
3000	0.25
3500	0.34
4000	0.45

48 in. x 12 in. (1219mm x 305mm)

Velocity (fpm)	Pressure Drop (in. wg)
500	0.01
1000	0.02
1500	0.04
2000	0.08
2500	0.12
3000	0.18
3500	0.24
4000	0.31

AMCA Figure 5.5

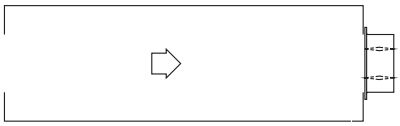

12 in. x 12 in. (305mm x 305mm)

Velocity (fpm)	Pressure Drop (in. wg)
500	0.04
1000	0.14
1500	0.31
2000	0.55
2500	0.86
3000	1.23
3500	1.67
4000	2.19

24 in. x 24 in. (610mm x 610mm)

Velocity (fpm)	Pressure Drop (in. wg)
500	0.03
1000	0.12
1500	0.27
2000	0.48
2500	0.75
3000	1.07
3500	1.47
4000	1.91

36 in. x 36 in. (914mm x 914mm)

Velocity (fpm)	Pressure Drop (in. wg)
500	0.03
1000	0.10
1500	0.22
2000	0.39
2500	0.61
3000	0.87
3500	1.19
4000	1.56

12 in. x 48 in. (305mm x 1219mm)

Velocity (fpm)	Pressure Drop (in. wg)
500	0.03
1000	0.11
1500	0.25
2000	0.46
2500	0.72
3000	1.05
3500	1.43
4000	1.87

48 in. x 12 in. (1219mm x 305mm)

Velocity (fpm)	Pressure Drop (in. wg)
500	0.03
1000	0.11
1500	0.26
2000	0.46
2500	0.72
3000	1.02
3500	1.40
4000	1.83

Space Envelopes

Externally mounted actuators always require space outside of the damper sideplate or sleeve.

On dampers less than 18 in. (457mm) high, actuators may also require clearances above and/or below the damper. “B” and “T” dimensions are **worst case clearance requirements for some dampers less than 18 in. (457mm) high**. All dampers 18 in. (457mm) or more in height, do not require these worst case clearances. If space availability above or below the damper sleeve is limited, each damper size should be individually evaluated.

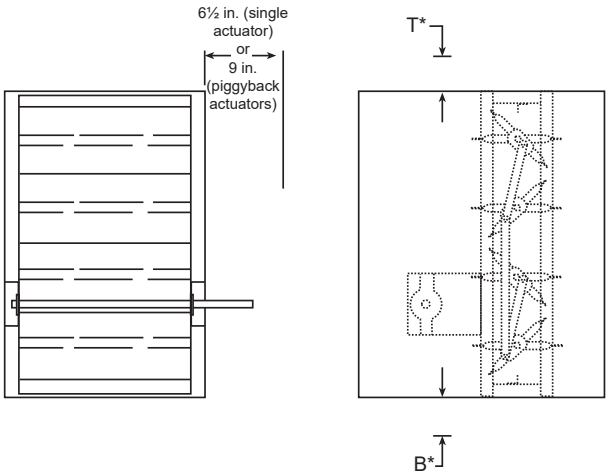

Actuator Type/Model	B	T
	Inches (mm)	
FSAF, FSAFB, and FSNF Series, Belimo	1½ in (38mm)	9¼ in (32mm)
FSLF Series, Belimo	8 in (203mm)	1½ in (32mm)

Multiple Section Dampers

Dampers larger than the maximum single section size, will be made up of a multiple equal size sections. Multiple section dampers can be jackshafted together so that all the sections operate together as shown below.

2 sections wide

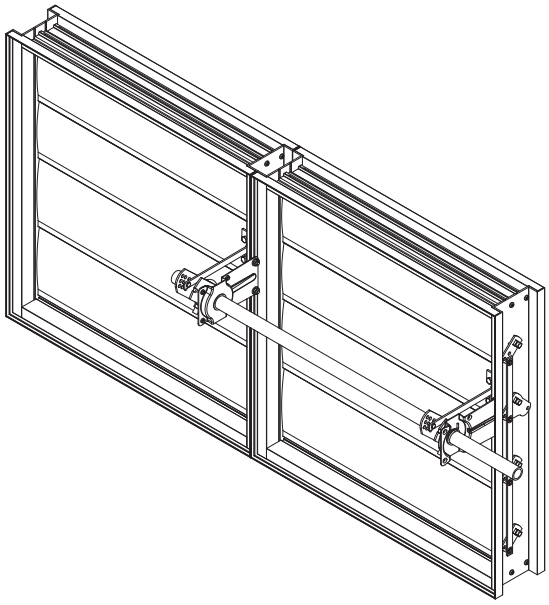

4 sections wide
2 sections high

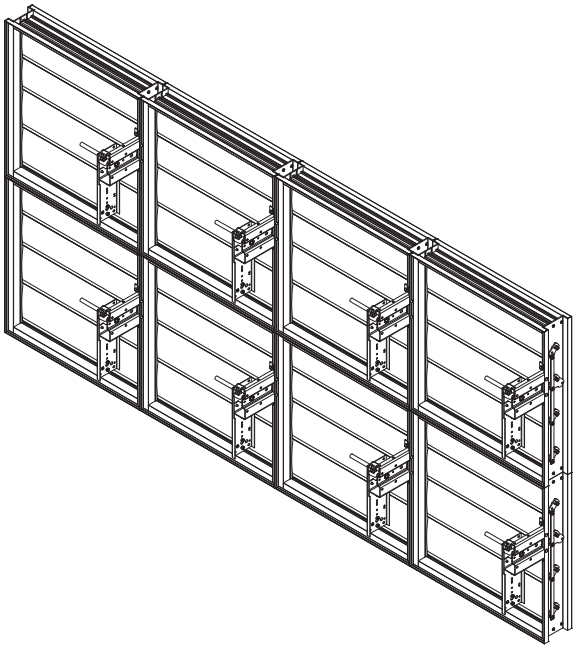

Copyright © 2024 Greenheck Fan Corporation

Greenheck Fan Corporation reserves the right to make product changes without notice.