SSDFD-350

Dynamic Rated Fire Damper

Application

Model SSDFD-350 is a dynamic rated fire damper approved for use in walls and partitions with fire resistance ratings of 3 hours or more. This model carries a 3 hour UL 555 fire damper label and is dynamic rated for use in HVAC systems that are operational in the event of a fire.

Ratings

UL 555 Fire Resistance

Fire Rating: 3 hours

Velocity

2000 fpm (10.2 m/s) vertical mount

Pressure

Maximum: 4 in. wg (1 kPa)

* These dimensions are furnished approximately ¼ in. (6mm) undersize.

Construction

Construction	Standard	Optional
Frame Depth	3 11/16 in. (94mm)	-
Frame Material	304SS*	-
Blade Material	304SS*	-
Closure Spring	Stainless steel	-
Fusible Link	165°F (74°C)	212°F or 286°F (100°C or 141°C)
Mounting	Vertical	-

* in gauges required by UL listing R13317

See complete marking on product.
UL 555 Classification R13317

Model SSDFD-350 meets the requirements for fire dampers established by:

National Fire Protection Association
(NFPA Standards 80, 90A & 101)

Underwriters Laboratories Standard 555
(Listing #R13317)

IBC International Building Codes

California State Fire Marshall
(Listing #3225-981:102)

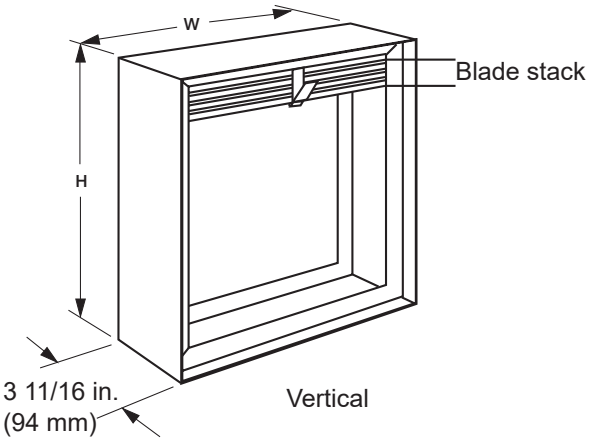

Options

- Sealed transitions (sleeve required) and sleeves
- One piece retaining angles (POC)
- Transitions (B, C, CO, CR, R)

Document Links

INSTALLATION

CATALOG

SELECTION GUIDE

INSTALLATION SOLUTIONS

SPECIFICATIONS

WARRANTY

Factory Sleeve Option

All fire damper installations require the use of sleeves, angles and methods described in the installation instructions. Sleeves can be field fabricated or factory furnished as a completed damper/sleeve assembly.

Sleeves are galvanized steel and are available in 20 through 10 ga. (1mm - 3.5mm) thickness and lengths up to 36 in. (914mm).

“K” dimension specifies location of damper within the sleeve. Minimum is 4 in. (102mm), maximum is “L” less 4 in. (102mm), which allows for retaining angle installation, and duct connection at each end of the sleeve. If “K” dimension is not specified, it will be provided as one half of “L” dimension (damper centered in sleeve).

Note: If using access doors, the door should be installed on the “K” side of the damper.

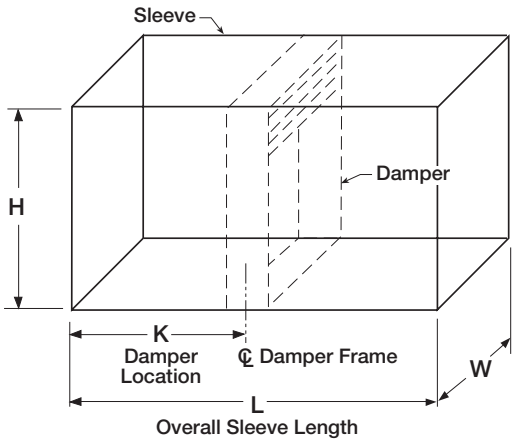

Sealed Option

When sealed option is selected, damper sleeve will be sealed to the damper frame or selected transition using UL approved sealant. For B transitions, the corners will need to be field sealed in the area where the duct to sleeve connection is made.

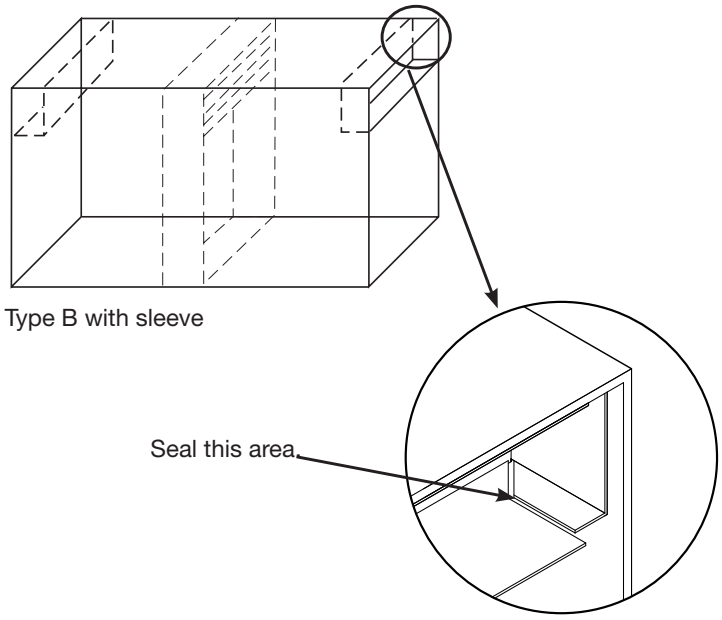

Types A,B, & B2

Dampers are supplied in single section only.

Size Limitations

Inches (mm)	Single Section	
	Minimum	Maximum
Type A	4 x 4 (102 x 102)	30 x 30 (762 x 762)
Type B & B2	4 x 3 (102 x 76)	30 x 26 (762 x 660)

* Sizes are based on 165°F closure temperature and 2000 fpm. Consult factory for maximum size for different temperatures and velocities.

Maximum Single Section Dimensions

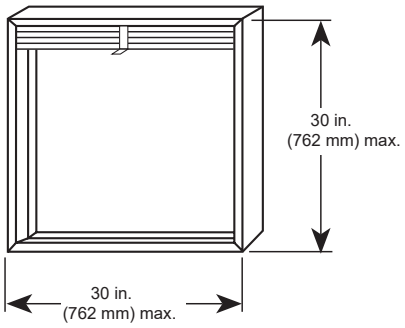

Type A

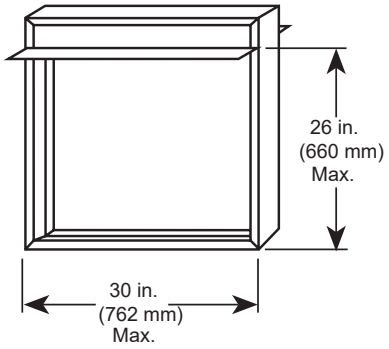

Type B

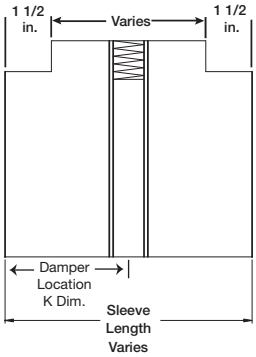

Type B2 side view

Overall Damper Dimensions

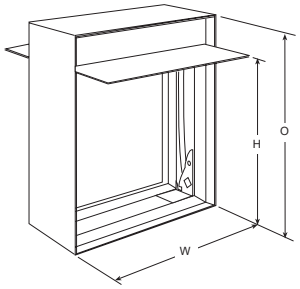

Type B

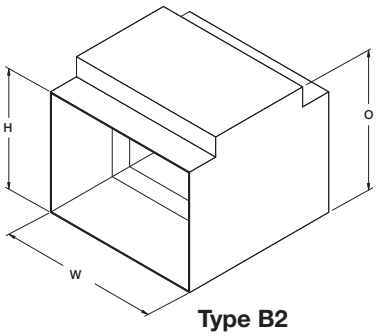

Type B2

H*	O*
3 (76)	5 (127)
4 (102)	6 (152)
5 (127)	7 (178)
6 (152)	8 (203)
7 (178)	9 (229)
8 (203)	10 (254)
9 (229)	11 (279)
10 (254)	12 (305)
11 (279)	13 (330)
12 (305)	14 (356)
13 (330)	15 (381)
14 (356)	16 (406)
15 (381)	18 (457)
16 (406)	19 (483)
17 (432)	20 (508)
18 (457)	21 (533)
19 (483)	22 (559)
20 (508)	23 (584)
21 (533)	24 (610)
22 (559)	26 (660)
23 (584)	27 (686)
24 (610)	28 (711)
25 (635)	29 (737)
26 (660)	30 (762)

*Dimensions are in inches (mm). These dimensions are furnished approximately ¼ in. (6mm) undersize.

Types C, CO, & CR

The following chart shows minimum and maximum damper section size. Dimensions are in inches (mm).

Size Limitations

Inches (mm)	Single Section	
	Minimum	Maximum
Type CR	3 (76)	25 (635)
Type C & CO	3 x 3 (76 x 76)	28 x 25 (711 x 635)

* Sizes are based on 165°F closure temperature and 2000 fpm. Consult factory for maximum size for different temperatures and velocities.

Maximum Single Section Dimensions

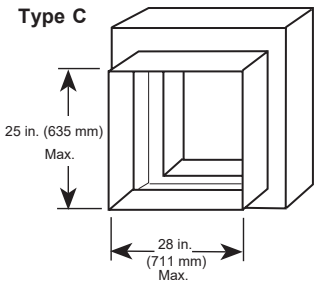

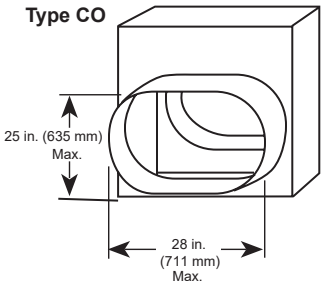

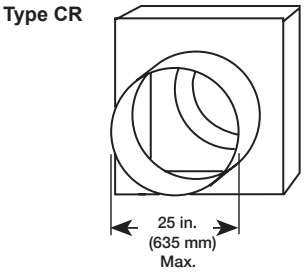

Overall Damper Dimensions

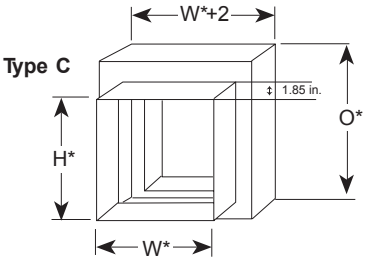

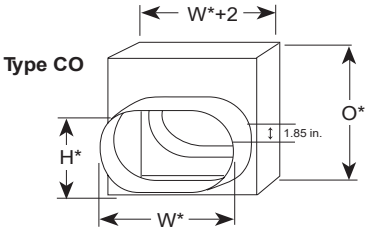

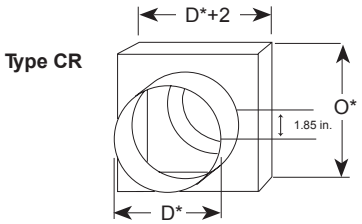

*See page 6 for O dimension information.

C, CO, CR transitions are positioned 1 in. (25mm) from bottom of sleeve.

Types C, CO, & CR

H* or D*	O*
3 (76)	6 (152)
4 (102)	7 (178)
5 (127)	8 (203)
6 (152)	9 (229)
7 (178)	10 (254)
8 (203)	11 (279)
9 (229)	12 (305)
10 (254)	13 (330)
11 (279)	14 (356)
12 (305)	15 (381)
13 (330)	16 (406)
14 (356)	18 (457)
15 (381)	19 (483)
16 (406)	20 (508)
17 (432)	21 (533)
18 (457)	22 (559)
19 (483)	23 (584)
20 (508)	24 (610)
21 (533)	26 (660)
22 (559)	27 (686)
23 (584)	28 (711)
24 (610)	29 (737)
25 (635)	30 (762)

* Dimensions are in inches (mm). These dimensions are furnished approximately ¼ in. (6mm) undersize, except round and oval dimensions (D, H, W) are approximately ⅛ in. (3mm) undersize. (All 'H' dimensions larger than single section height are two sections high. Refer to chart.)

Type R

Size Limitations

Inches (mm)	Single Section		
	Minimum	Maximum with 1 in. offset	Maximum with 2 in. offset
Type R*	3 (76)	29 (729)	28 (711)

* Sizes are based on 165°F closure temperature and 2000 fpm. Consult factory for maximum size for different temperatures and velocities.

Overall Damper Dimensions

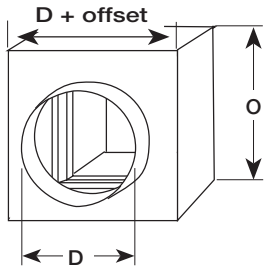

Type R transition is centered in damper sleeve.

To calculate O Dimension:

Diameter + offset (1 or 2 in.) = O Dimension

Copyright ® 2024 Greenheck Fan Corporation

Greenheck Fan Corporation reserves the right to make product changes without notice